ResearchGate

See discussions, stats, and author profiles for this publication at: https://www.researchgate.net/publication/349772778

Space Robotics and Associated Space Applications

Chapter · March 2021

DOI: 10.1007/978-3-030-60694-7_9

CITATIONS
0

READS
70

1 author:

Ijar M da Fonseca
Instituto Tecnologico de Aeronautica

9 PUBLICATIONS **0** CITATIONS

SEE PROFILE

Some of the authors of this publication are also working on these related projects:

Project

Space robotics experiment: two aerosupported robot manipulators operating on a glass table View project

Space Robotics and Associated Space Applications March 2021 DOI:10.1007/978-3-030-60694-7_9
In book: Vibration Engineering and Technology of Machinery, Proceedings of VETOMAC XV 2019 (pp.151-170)

All content following this page was uploaded by Ijar M da Fonseca on 30 June 2021.

The user has requested enhancement of the downloaded file.

Space Robotics and Associated Space Applications

In: Vibration Engineering and Technology of Machinery, Proceedings of VETOMAC XV 2019 (pp.151-170)

Ijar M. da Fonseca

Abstract This chapter deals with space robotics and its associated space applications. In order to contextualize the robotics in the space exploration scenario, this paper presents an overview of the space age and the first robotic probes preceding the landing of the astronauts on the Moon. In addition, the paper approaches and discusses space robotics fundamental concepts, classification, and safety-critical aspects for space robotics applications. The space robotics state of the art presented in this article, focuses on the International Space Station (ISS) Extravehicular Activities (EVA), the planetary explorations (like the current Mars exploration), JAXA's Hayabusa mission that rendezvoused and landed on the 25143 Itokawa asteroid, and in the ESA/DLR's Rosetta spacecraft carrying its Philae robotic module which landed on the 67P/Churyumov-Gerasimenko comet. The article includes a discussion of on-orbit servicing and rendezvous & docking/berthing (RVD/B). Finally, the paper presents the modeling techniques to derive the equations of motion for manipulator-like spacecraft.

Keywords Space robotics · Robot manipulators · Rendezvous and docking/berthing · On-orbit servicing (OOS)

1 Introduction

The space robotics characterized all the space missions in the beginning of the space era and was a key issue to the evolving of the space exploration. In the beginning of the space race between the former Soviet Union (URSS) and the USA, the satellites were robot spacecraft or probes orbiting the Earth that evolved in an amazing progress to the Moon, other planets and, the Sun and finally, asteroids and comets. Remarkably, the space journey reached the interstellar region with Voyager 1 and 2 after visiting all the most distant planets of the solar system. The robot spacecraft evolved systematically, first to the Earth orbit by sending to ground control centers alive signals and Earth

I. M. da Fonseca (✉)
Technological Institute of Aeronautics (ITA), DCTA, São José dos Campos, S.P, Brazil
e-mail: ijar@ita.br

© The Author(s), under exclusive license to Springer Nature Switzerland AG 2021

J. M. Balthazar (ed.), *Vibration Engineering and Technology of Machinery*,
Mechanisms and Machine Science 95, https://doi.org/10.1007/978-3-030-60694-7_9

images as photographed from space. In the next, the space race included sending cosmonauts (term used by the soviets) and astronauts (term used by the USA). The idea was sending humans to space and then starts space walk tests to study the capability of man to work and survive in space. The meaning of such walk was time that the astronaut/cosmonaut stayed floating outside the spacecraft, connected by an umbilical cable. However, before humans went into space in the 1960s, the two leaders of space race sent animals to orbit aiming investigation of biological effects of spaceflights. The soviets got the first by sending to orbit a dog named Laika (November 1957). It became the first animal to orbit the Earth, paving the way for human spaceflight during the upcoming years. Later, in 1961, the US sent an ape to orbit, Ham, selected as the chimpanzee to test the safety of space flight on the ape body.

After the tests with animal, humans took their way to orbit implementing investigation of several effects of spaceflight on the human body and space walk tests to investigate the body reactions in the microgravity and the capability of the space suits to protect the man against the hostile radiation and temperature outside the spacecraft. Next step it was flights to the Moon and the planetary exploration. The first goal was the Moon. Here we note that the U.S. and the former Soviet Union took different approaches to implement the Moon landing. The soviet option was to land robot spacecraft on the Moon and then return them to Earth without cosmonauts. The U.S. opted to land the men on the Moon and bring them safely back home. The common requirements for both countries to accomplish their goals were the study of the Moon's surface and the finding of an appropriate and safe site to land, in addition to return from there with soil samples. The use of robot spacecraft by the soviets clearly shows that they would not have to risk cosmonauts' life. On the other the hand U.S. manned lunar missions would have to face that risk.

Before the man landed the Moon, several robot spacecraft sent toward the Moon aimed gathering data that would be used to the mapping of the lunar surface and the choosing a safe-landing site. The first robot spacecraft were impact probes. The goals were photographing or recording videos and sending them to ground control stations before crashing on the Moon's surface. The results were the mapping of the surface and determining safe land-sites as planned. The Soviets and Americans accomplished these objectives. Missions then extended to robotic probes landing on the Moon to test landing on pre-selected sites. The soviet robotic space mission to land the Mon and return to Earth did require some operations that would be necessary to the U.S. manned mission. One the U.S. planned lunar mission requirements was the capability to implement undocking, rendezvous and re-docking operations of the LM. The implantation of these operations occurred in two phases of the flight, the descent to the Moon and the lifting from its surface to rendezvous an re-dock with the lunar orbiter CM. Before Apollo-11 mission implementation, those RVD techniques were subject of studies and several orbital tests.

The strong competition between soviets and the U.S. to get firsts during the space race appears clearly in the conquest of the Moon. The soviets objective was to battle the U.S. by arriving on the Moon, collecting lunar samples and returning them to Earth without any on-board cosmonauts. Had them succeed the U.S. mission would

lose much of its bright in the space race. However, the soviets, whom had the most of the first in the space race since the launching of the Sputnik satellite in 1957, would not win the game this time. When the astronauts landed successfully on the Moon the soviet robot probe Luna-15 was also arriving, but it failed to land and crashed in the Moon. That was the space race in the time of Cold War. The soviets had collected the most of the all-first in the space race since 1957 and lost perhaps this most important event of the space race. The U.S. planed, executed and implemented the most challenging and complicated, not to say the difficult, project ever, to get that first by landing a man on the moon. The Apollo-11 mission obtained very important outcomes as landing the first man on the moon, first human work on the moon, collecting Moon's soil samples and returning them to Earth, implementing operations of the LM undocking, rendezvous and re-docking with the Apollo-11 CM lunar orbiter, and returning back home successfully. The LM never returned to Earth.

After the Appolo-11 mission, NASA sent several manned missions to the Moon. Meanwhile other plans were in place such as exploring other planets of our solar system and development of space stations. The idea of using robot manipulators, a space shuttle as well astronauts/cosmonauts for on-orbit servicing implementation was part of the then future projects. Also, during the period that preceded the man landing on the Moon, the soviet got an interesting first by sending robotic probes to Venus, including a robotic probe landing on the planet. The U.S. sent also spacecraft to the planet. Their competition continued from Venus to Mars. Both of them obtained important outcomes as close images of the planets, atmosphere composition, surface data, and planet temperatures. The planet surface mappings and possible landing sites paved plans for the next projects of space exploration. The space stations came about and this time the competition between the two giants of the space exploration starts merging to cooperative projects for space activities.

The Skylab Orbital Workshop was a temporary U.S. space station. It consisted of a 22-foot-diameter cylindrical Orbital Workshop (OWS) with two wings-like solar arrays, a cylindrical Airlock Module (AM), a multiple docking adapter (MDA), and a truss-mounted Apollo Telescope Mount (ATM) with four solar arrays arranged in a windmill formation. Uncrewed, the launching inserted the space station into 435 mKm low Earth orbit. A micrometeoroid shield tore away from the OWS, damaging the station during launch. The incident took one of the main solar arrays and jammed the other main. This deprived Skylab of most of its electrical power and removed protection from intense solar heating, threatening to make it unusable. Three subsequent missions (Skylab 2, Skylab 3, and Skylab 4) delivered three-astronaut crews to the space station. The first crew deployed a replacement heat shade and freed the jammed solar panels to save Skylab. A maintaining operation of such magnitude was the first OOS ever performed in space. A four mission (Skylab 4) was a rescue mission to bring back home the astronauts. The delay in the Space Shuttle project became a problem to NASA's plan to extend the station life. The re-boost of the space station was not possible and Skylab's orbit decayed and it burned up in the atmosphere on July 11, 1979, over the Indian Ocean.

In 1993, the U.S. effort turns to the International Space Station (ISS), a multinational collaborative project involving 5 space agencies: NASA (U.S.), Rosccosmos

(Russia), JAXA (Japan), ESA (Europe), and CSA (Canada). It is a modular station assembled in space, following ideas by von Brown and his conceptions of space station designs in the late 1950s. This kind of activity belongs to the set of OOS [5], a subject of the next section. The ISS is still operating in space in an integrated effort of several countries, enabling a series of scientific research in astrobiology, astronomy, meteorology, physics, and other fields, in addition to several engineering experiments in the orbital microgravity environment. The station allowed the consolidation of robot manipulator applications and other types of robots as well. There are experiments never thought presently implemented in the station, such as a greenhouse for growing vegetables in an Earth pressure, temperature, an atmosphere. Intergovernmental treaties and agreements establish the ownership and use rights of the ISS.

To close this section it is worthy no point out where we are in the space exploration started in the late 1950s. NASA has some robots operating in Mars and preparing to start the Moon and Mars colonization. All the planets in solar system received a visiting probe for image taking and scientific studies. Included are several planetary moons and the rocks of the Saturn' rings. Since the 1990s, space probes visited 16 minor celestial bodies: asteroids, dwarf planets, and Kuiper belt objects. The Hubble Space Telescope orbits the Earth and it has imaged several asteroids and observed distant galaxies. Spacecrafts has also visited 9 comets: Giacobini–Zinner, Halley, Grigg–Skjellerup, Borrelly, Wild 2, Tempel 1, C/2006 P1 (McNaught), Hartley 2, Churyumov–Gerasimenko. Voyager 1 and 2 are in spacecraft have travelling in space for almost 44 years. Launched in 1977 both spacecraft have reached the interstellar space. The spacecraft visited all the most distant giant planets of the solar system, sending images to Earth. The Voyagers are the most distant human-made objects from Earth. Part of the Voyager missions objectives was a study of the outer Solar System. The spacecraft are about 22.2 billion km from Earth as of March 12, 2020 and their communication with Earth is still alive. Outcomes from Voyager probes include the study of the weather, magnetic fields of Saturn and Jupiter and the rings of Saturn. Voyager 1 was the first probe to provide detailed images of the moons Saturn and Jupiter and the first spacecraft to cross the heliopause and enter the interstellar medium a region beyond the influence of the Solar System, joining Voyager. Voyager 2 has begun to provide the first direct measurements of the density and temperature of the interstellar plasma.

Each Voyager space probe carries a gold-plated audio-visual disc in case intelligent life-forms from other planetary systems find either of the spacecraft. The discs carry photos of the Earth and its life forms, scientific information, spoken greetings from people, and a collection of music. It includes are also a miscellany of sounds of Earth as the sounds of whales, a baby crying, waves breaking on a shore.

2 Space Robotics and on-Orbit Servicing (OOS)

The orbital dynamics includes the orbital and the attitude motion. The orbital robotics refers to the robot motion in orbital environment of microgravity, subjected to the external forces and toques.

The space robotics classifies as orbital and planetary robotics. Orbital robotics takes place in the microgravity environment where prevails the combined effects of Sun, Moon and other planets gravitational forces, strong temperature variation, electromagnetic effects, atmospheric drag, and huge cosmic radiation. In the next the paper discusses the orbital robotics issues

Due to microgravity, any artificial or natural orbiting body experiences lack of weight and floats, as they were weightless. In such scenario, even low forces or torque can translate and/or rotate large loads. In orbital mechanics, the orbiting motion a space vehicle is the motion of its center of mass (CM) about its attractor (planet or other celestial body). The CM position can changes if

- any mass component of the vehicle moves from the original position, breaking the nominal mass distribution taken into account to define the original CM;
- Fuel and/or water consumption affects the mass configuration about the original CM;
- In case of undocking or docking and berthing to or de-berthing from a space vehicle

In this study, the focus is the case of robot manipulator moving from its base under joint control commands. In general, the robot manipulator is at rest (off) and part of the satellite, counting on for the nominal orbiting CM position. When the robot arm starts moving, the CM of the subsystem changes to a new position. However, as the position of the original CM cannot change unless control forces are applied, the system moves in the contrary direction of manipulator arm, keeping orbiting CM in the same position. As the robot moves back with the satellite the manipulator end effectors fails to capture its target. To avoid the failure the robot control commands must compensate the system back motion when implementing the robot arm path planning. This is to say that it is necessary to plan the arm path taking into account the spacecraft back motion to avoid the arm missing its target. However, another problem affects the path planning. The space vehicle orientation (attitude motion) can change in response to the torque commanded to the manipulator joints. The reaction to the commanded torque acts on the satellite and it moves in rotation, taking away the end effectors from the capture point in the target. It is not easy to design an AOCS (attitude and orbit control subsystem) to compensate the change in the CM position and at same time keep the satellite in its nominal attitude. In fact, this problem requires analyzing the relative orbit and attitude motion. The berthing operation involves RVD between two orbiting space vehicles followed by berthing (grasping our capture operation). The relative attitude implies synchronizing the attitude motion of both spacecraft so that the relative attitude is zero. The same is valid fort the relative position. When the relative velocity is zero, the position of the

CM of both spacecraft stays at the same distance from each other. To close this subject it is necessary to discuss the manipulator workspaces. Manipulators can capture or grasp only objects that are inside its workspace. This is to say that the AOCS must have the capability to synchronize the relative attitude in zero and then, identify and track the berthing point to have it inside the manipulator workspace when relative velocity reaches zero. In short, the requirements for a successful grasping are

- The grasping point shall be inside the manipulator workspace
- Relative attitude between both spacecraft shall be zero
- The Relative orbital rate between both spacecraft shall be zero

The idea behind the OOS [7] relates to space robotics and RVD/B operations [1, 9, 13]. It involves providing in-orbit services to spacecraft and space stations such as refueling, maintenance, exchange of astronauts and scientific experiments in space stations, assembling parts of large space structures in space, cleaning around the orbit to prevent collisions with space debris, and extending life of satellites. The idea remounts von Browns' conceptual projects of space stations. According to his ideas, the assembling of Space Stations by astronauts with support of robot manipulators, a space shuttle for travelers to and from Earth would be feasible and necessary to assembly space station in orbit. The U.S. learned much on this with the Skylab experience. Astronauts send to that station repaired damages that happened during the launching of the Skylab. RVD/B is the mean to approach one spacecraft to another (rendezvous) and dock (docking port required) and berthing (using robot manipulators). The sequence of RVD phases preceding docking or berthing occurs in the scenario of microgravity and encompasses the problems discussed about floating, relative motion and non-fixed base for robots [5, 12]. The implementation of the Rendezvous & Docking technique remounts the first years of the space era in the 60s [10, 11]; RVD/B orbital operation was a key issue to accomplish the landing of man in the Moon. Several orbital tests of RVD/B implemented by NASA and Russian consolidated the implementation a sequences of docking, undocking and re-docking of two space vehicles in orbit, executed by astronauts and cosmonauts and some executed automatically (en.wikipedia.org/wiki/Space_rendezvous) Interviewed by Doug Ward/Elk Lake, Michigan—June 29, 1999. The success of the tests allowed the NASA Apollo 11 to separate from its lunar module (LM) with two astronauts, which landed on the Moon. A third astronaut stayed inside the Command Module (CM) orbiting the Moon and waiting for the LM return from the moon. After accomplishing successfully the landing and the planned activities on the Moon surface, the astronauts lifted off the LM that rendezvoused and re-docked to the orbiter CM. Then the astronauts entered back to the CM, discarded the LM, and returned to Earth. The lunar mission operation of RVD counted on the astronaut participation.

Later, in the 1997 the Japanese implement an orbital test of RVD/B by using for first time a robot manipulator for berthing operation. The Engineering Test Satellite VII (ETS-VII), developed and launched by National Space Development Agency of Japan (NASDA) successfully orbited the Earth carrying out important and innovative experiments on orbital robotics including a 2 meter-long, 6 DOF robot manipulator. The ETS-VII was an un-manned spacecraft. The experimental orbital tests

accomplished remarkable outcome in space robotic application in RVD technology. It was the world's first satellite to be equipped with a robotic arm, https://en.wikipedia.org/wiki/ETS-VII-cite_note-fujipress-2 and the first unmanned spacecraft to conduct autonomous rendezvous & docking operations successfully. Japan was one of the partners of ISS project development and implementation, giving a very important contribution ISS with the module JEM (Japanese Experiment Module) which includes a *10 m* long robot manipulator system (JEMRMS).

The automated rendezvous and the concept of OOS pushed the development of RVD/B for OOS to the ISS. The first space tug for OOS was the Space Shuttle. A partially reusable low Earth orbital spacecraft system, it was operated from 1981 to 2011. Astronauts took off the Earth to ISS and then came back to Earth using the Space Shuttle. The Shuttle missions provided OOS by taking water, fuel, experiments, replacing astronauts and so on, via Space Shuttle. The use of Shuttle robotic manipulator as cargo helped the assembling of the ISS by transporting large structures in space for years. The Shuttle also provided OOS by grasping and repairing satellite and then putting them to their orbit. The Shuttle was equipped with long robotic manipulator. Some satellites were taken aboard the Shuttle, repaired and the, put back on their orbit. It was remarkable the repairing of Hubble Telescope in 1993. It was amazing to watch the astronauts alive in the TV repairing the space telescope.

The concept of OOS applications and the RVD/B operations implemented by astronauts evolved to automatic RVD with support from ground, and then to autonomous operation. Future missions to colonize the Moon and Mars shall enforce new developments in the RVD/B and planetary robotic activities toward completely autonomous control subsystems.

The RVD requires the target spacecraft to have docking ports. In this case, the control must identify the docking port and track it very accurately in the close proximity [2] phase to reach simultaneously the relative prescribed pose with relative velocity very close to zero to execute a soft docking safely. In case of berthing, a robot manipulator grasps the target and then the on-board operator commands the telerobots to complete the docking operation safely. The requirements for close proximity are the same as that for docking. The berthing may also be a target vehicle capability. In this case, the chaser spacecraft approach to the target reaching zero relative velocity when it is inside the target manipulator workspace. The target arm then captures the chaser and completes the docking safely by using telorobot capability of the target on-board control subsystem. This grasping operation counts on the participation of on-board astronaut. Nevertheless, the docking or capture techniques, the chaser must synchronize its orbital and attitude motions to that of the target. A RVD/B is cooperative when the operation involves interactions with the target spacecraft, a ground station, and a data relay satellite, to accomplish the docking or berthing. It may not require actions of astronauts. If the target is alive, the control commands may come for data relay satellites or ground station control centers. If the target spacecraft has a known geometry but it is death and without docking ports, it is still possible to implement a berthing operation. To accomplish such goal, a possible solution is the use of cameras and an on-board computer with capability to process and analyze the images to find a place on target to grasp it. This case still classifies as

cooperative berthing because the chaser receives the input on the chaser geometry. In case of debris with unknown geometry, the removing operation classifies as a non-cooperative and the chaser on-board computer would have to include capabilities to grasp autonomously the target and take it to a parking orbit or simply take it away from the spacecraft trajectory. For the case of unmanned chaser to grasp unknown asteroids and comets, the chaser's AOCS (Attitude Orbit Control Subsystem) must include capability to rendezvous and land in the target without support of ground station or data relay satellites. However, for known celestial trajectories, help can still come from an Earth ground station, mainly in the case the rendezvous and landing mission includes a target orbiter and a landing module. During the module descent the target orbiter send/receives information from Earth and then command the lading module. If the target surface is unknown, the orbiter takes close images from it and sends them to ground station. The images are processed and analyzed to define the proper landing site. Then the control station sends the information to orbiter that by its turn commands the landing site to the descent module. This was the case of Rosetta mission and its lander module to the comet 67P/Churyumov–Gerasimenko (67P).

One important concept in the area of space robotics is space telerobot [12]. This concept refers to machines that perform physical tasks in the space environment. The machines go from space manipulators to robonauts and planetary/lunar rovers. Robonauts are the ultimate NASA robots with capability to mimic humans' arm motion. The astronauts may be using leap motion controller to teach robonauts to follow and learn their arm motion. Actually, the Robonauts are already being tested and used in the ISS to support astronauts by performing the EVA. Inside the ISS they helps astronauts in the IVA. The robonauts conception was that of human being image as they have shape similar to humans. They possess articulated legs, articulated arms and five fingers hands. By having hands similar to humans they can manipulate tools that man uses. Their legs contain more degrees-of-freedom than humans' lags and ends with hands instead of feet. This feature allows the robonauts to grasp and hold firmly outside on the ISS structure, while performing EVA.

Telerobots are machines that operate both autonomously, when no operator commands are need for the task or in conjunction with an operator who monitor and send commands to the remote site. The main reason for using telerobots is to perform tasks that would somehow be difficult, risky and even impossible for humans in the orbital environment or on the surface of celestial bodies. Most of the tasks for telerobots are related to OOS. They shall perform activities of

- maintenance,
- repairing,
- refueling,
- replacing spacecraft's modules,
- bringing experiments to/from space vehicles,
- replacing experiments,
- capturing debris for cleaning orbits,
- capturing satellites to extend their life,

- executing EVA
- helping astronauts with intra vehicular activities (IVA),
- transporting and assembling structures in orbit.

Telerobots are to support a lot of work in space, be it in orbit or another celestial body. In a near future, the telerobots will be a strategic component of the Moon and Mars colonization.

A space telerobot involves a local site or station from where the operator interacts with the remote site. The local site includes the interface from where the operator receives the remote site data, analyzes them to understand the task in operation and commands the telerobot. Figure 1 shows the data flow of a space telerobot illustrating the local and remote sites, the operator to remote site interface, and the major components of the space telerobot.

The use of long robot arms for on-orbit large load transportations brings about another complication, the structural flexibility of the manipulator links. This is a problem known as CSI (Control Structure Interaction). The vehicle control action excites the arm links flexible modes of vibration during orbital robotic operations. The arm links flexible vibrations may lead the end effectors to miss the grasping point in the target. For this case, no implemented efficient solution is available. However, researcher's studies suggest that the use of viscoelastic and PZT materials could be a good solution for the control problem involving structural flexibility. From the point of view RVD/B dynamics analysis, there are other complicated issues, such

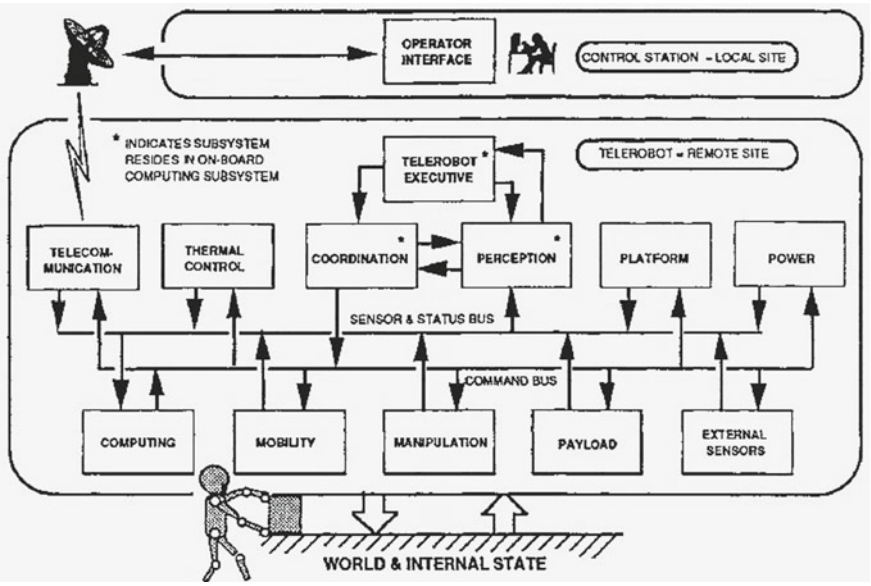

Fig. 1 Space telerobot system data flow (From [12])

mathematical modeling and computer simulations of the relative motion between chaser and target spacecraft. The paper discuss in next the planetary robotics issues.

The planetary robotics deals with robot motion on the surface of planets or other celestial body. Because of celestial bodies may have different gravitational forces, temperatures, radiation levels and different surfaces features compared to Earth, the planetary robot must be designed properly for the environment it will work. For the lunar regolith surface, the robot moves well over wheels. This is not the case for robot mobility on Mars surface. The Mars planetary rovers use a combination of wheels and articulated legs to in the area covered by Rockies, regolith, and sand of the Martian planet. If the surface is swamp-type, ice-type, and liquid-type then it is necessary to find the proper devices for the robot mobility. The planetary robots do not face microgravity problems of the orbital robot operations. Temperature, atmosphere, radiation and electromagnetic effects of planetary surfaces also affect the material, joints functioning, and efficiency of robotic systems. The landing in certain celestial bodies like comets and asteroids where the local gravity is very weak the robot stability may require some kind of control device to keep the vehicle stable on the surface.

The case of landing in asteroids and comets is in a gray zone between orbital robotics and planetary robotics and did not receive yet any classification en terms of space robotics. Maybe this case will receive a classification as asteroids/comets robotics. In short, spacecraft rendezvous followed by landing in an unknown celestial body requires command control and trajectory monitoring from ground control centers or from orbiting spacecraft about the target body. In such case, a previous knowledge of the body orbit, shape, surface features, local gravity and temperature among others is a key issue for the landing successful accomplishment. To illustrate this, consider the landing of the Rosetta's Philae module on the 67P/Churyumov-Gerasimenko comet. After traveling 10 years eight months in space, Rosetta received ground command to free its lading module toward the surface of the comet nucleus (November 12, 2014). However, it was not a straightforward command since the comet shape, surface features, size, and other important aspects were unknown, a meaningful selection of the landing site would require information that Rosetta would send to Earth. Rosetta had appropriate set of sensors, cameras, and other instruments to provide the comet's data to the Earth control center. Rosetta accomplished this data by orbiting and taking close images of the comet. Receiving and processing the data received from Rosetta the control center determined the comet's shape, surface characteristics, rotation and orientation, temperature variation, local gravity, Sun illumination, and analyzed the trajectories and landing sites for Philae landing. The control center still detected a last minute problem with a thruster that failed to fire. However, after checking that there was not possibility to fix it, the control center decided to command the landing. Philae had stability problems when its anchoring harpoons failed to deploy and that failed thruster could not support the landing. After bouncing off the surface twice, Philae achieved the first-ever nondestructive landing on a comet nucleus, in spite of its final and uncontrolled touchdown that left it in a non-optimal position and orientation. Despite the landing problems, the robot probe's instruments obtained and transmitted to Earth the first images from surface of

a comet and made the first direct analysis of a comet, sending back data that allowed scientist to determine the composition of the comet's surface for the first time.

3 Mathematical Modeling Issues and Computer Simulations

One important issue involved in planning space robotic missions is the dynamics analysis. The output of such analysis is previews on stability, control law/techniques performance, safety critical problems that may lead to mission failures as for example, collision avoidance, among other. In this scenario, the mathematical modeling and computer simulations play a very important role. Mathematical modeling is the activity of obtaining the mathematical model (the equations of motion) that represents the body or object dynamics in some environment. Such environment can be the orbital microgravity or space environment, ground and atmospheric environment of Earth and other planets or celestial bodies as well, the submarine environment where the hydrodynamics forces are dominants, and so on. The environment acts on the dynamics with torque and/or forces (dissipation forces, and magnetic forces, gravitational forces. The equations of dynamics are second order differential equations representing the body motion. Sometimes control forces/torques conducts the dynamics to guide the system dynamics in a desired or prescribed way. The mathematical model must be as accurate as possible aiming a consistent dynamics analysis. In this study, the focus is on the mathematical modeling and control. The control is a wide area of research and engineering that involve the methods, techniques and procedures to keep the system dynamics under a controlled motion. The mathematical model of robot-like spacecraft is, of course the same as any spacecraft, a set of differential equations combining two types of motion, the orbit and the attitude dynamics. The orbit refers to the path of the spacecraft center of mass about the Earth and the attitude refers to the rotational motion of the spacecraft about its center of mass and relates the orientation of the satellite with respect to (w.r.t.) some reference system of axis. For satellite-mounted manipulator or manipulator-like spacecraft, it is necessary to take into account the following

- the manipulator is not mounted on an inertially fixed base, but rather than in a movable base, affecting the capability of the robot arm to reach the commanded position in space unless the path panning compensate the change in the CM position of the manipulator when it operates in space. The CM changes in response to the commanded control/forces the arm joints;
- the orientation (attitude) of the manipulator-like spacecraft changes due to the joints control commanded torque, unless the vehicle attitude and orbit control subsystem (AOCS) maintains the attitude in the nominal specification while the manipulator works;
- control commands during the phase of close proximity to a space target are computed on the base of relative motion data;

- the path planning to take the robot end effectors to a point in the target must consider that, in the microgravity environment, the arm links motion causes a shift of the manipulator CM. In response to this, the system moves back in contrary motion of the robot arm to keep the system CM in the same position. It is worth to note that changes in the on-orbit CM result in changes of the orbit and depends on the orbit control through an increment of velocity, Δv, or on a gravity assist maneuver. Accidents as collision with a significantly sized debris or during RVD/B orbital maneuver may also cause orbit changes in addition to destruction of the less massive body. This explains why, in absence of any orbit control commands, the orbiting robot manipulator moves somehow to maintain the orbiting CM in the same position. If the path planning does not compensate such motion, the manipulator end effectors miss the target.

There are different approaches to derive the equations of orbital dynamics. The Newton-Euler's method is a vector approach to obtain the orbit and attitude equations of motion. Working with vectors frequently requires body-free diagrams to compute reactions forces/torques and solve an algebraic system of equation to derive the differential equations of motion. In this approach, vector senses impacts the equations. It is necessary to avoid signal errors while deriving the equations of motion once they may compromise the consistence of the resulting equations. The Euler's equations are three first order differential equations in the components of the angular velocity vector. The Euler's equations are three first order differential equations in the components of the angular velocity vector. Those components are non-linear functions of the attitude angles and rates. The integration of the Euler's equations does not result in angular coordinates. For the dynamics analysis it is necessary to derive the set of first order kinematics differential equations and integrate those equations in conjunction with the Euler's equations to obtain angular position and rates. There are singularities in the Euler angles no matter which sequence of rotation chosen. To avoid the problem, the recommendation is to use quaternion to describe the attitude differential equations and after integration convert the quaternion back to attitude angles and rates. Reference [6] shows the dynamics analysis for a satellite by using quaternion instead of Euler's angles.

The Euler's equations in vector format is

$$I\dot{\boldsymbol{\omega}} + \boldsymbol{\omega} \times I\boldsymbol{\omega} = \boldsymbol{N} \tag{1}$$

where $\boldsymbol{\omega}$ is the angular velocity vector, $\boldsymbol{I}$ is the inertia tensor, and $\boldsymbol{N}$ is the torque vector. In matrix notation the system equation is

$$[I]\{\bar{\omega}\} + [\bar{\omega}][I]\{\omega\} = \{N\} \tag{2}$$

where $[I] = \begin{bmatrix} I_{11} & -I_{12} & I_{13} \\ I_{21} & I_{22} & I_{23} \\ I_{31} & I_{32} & I_{33} \end{bmatrix}$ is the matrix of inertia

$[\bar{\omega}] = \begin{bmatrix} 0 & -\omega_3 & \omega_2 \\ \omega_3 & 0 & -\omega_1 \\ -\omega_2 & \omega_1 & 0 \end{bmatrix}$ is the skew symmetric matrix in the components of angular velocity vector, $\boldsymbol{\omega}$

$\{\omega\} = \begin{Bmatrix} \omega_1 \\ \omega_2 \\ \omega_3 \end{Bmatrix}$ is the angular velocity vector

$\{\dot{\omega}\} = \begin{Bmatrix} \dot{\omega}_1 \\ \dot{\omega}_2 \\ \dot{\omega}_3 \end{Bmatrix}$ is the angular acceleration vector

From the kinematics the equation in terms of the Euler's angles, considering the sequence of rotation 3, 2, 1 is

$$\begin{Bmatrix} \omega_1 \\ \omega_2 \\ \omega_3 \end{Bmatrix} = \begin{bmatrix} 1 & 0 & -\sin\theta_2 \\ 0 & \cos\theta_1 & \sin\theta_1\cos\theta_2 \\ 0 & -\sin\theta_1 & \cos\theta_1\cos\theta_2 \end{bmatrix} \begin{Bmatrix} \dot{\theta}_1 \\ \dot{\theta}_2 \\ \dot{\theta}_3 \end{Bmatrix} \tag{3}$$

By solving Eq. (6) by $\begin{Bmatrix} \dot{\theta}_1 \\ \dot{\theta}_2 \\ \dot{\theta}_3 \end{Bmatrix}$

$$\begin{Bmatrix} \dot{\theta}_1 \\ \dot{\theta}_2 \\ \dot{\theta}_3 \end{Bmatrix} = \begin{bmatrix} 1 & 0 & -\sin\theta_2 \\ 0 & \cos\theta_1 & \sin\theta_1\cos\theta_2 \\ 0 & -\sin\theta_1 & \cos\theta_1\cos\theta_2 \end{bmatrix}^{-1} \begin{Bmatrix} \omega_1 \\ \omega_2 \\ \omega_3 \end{Bmatrix} \tag{4}$$

$$\begin{Bmatrix} \dot{\theta}_1 \\ \dot{\theta}_2 \\ \dot{\theta}_3 \end{Bmatrix} = \frac{1}{\cos\theta_2} \begin{bmatrix} \cos\theta_2 & \sin\theta_1\sin\theta_2 & \cos\theta_1\sin\theta_2 \\ 0 & \cos\theta_1\cos\theta_2 & -\sin\theta_1\cos\theta_2 \\ 0 & \sin\theta_1 & \cos\theta_1 \end{bmatrix} \begin{Bmatrix} \omega_1 \\ \omega_2 \\ \omega_3 \end{Bmatrix} \tag{5}$$

The Euler' equations can be written in terms of the attitude angles an rates by writing $\{\dot{\omega}\}$, $\{\bar{\omega}\}$, and $\{\ \omega\}$ in terms of Eq. (3). Of course, $\{\dot{\omega}\}$ is obtained by taking the time derivative of Eq. (3). As shown in the kinematic differential equation [4], there are singularities for $\theta_2 = n\frac{\pi}{2}, n = 1, 3, 5 \ldots$.

To solve singularity associated with kinematic differential equations it is usual to write the attitude equations in function of the quaternion. For the sake of illustration consider the Eqs. (7–8) where the Euler's modified equations are written in term of quaternion, considering a diagonal inertia matrix. The problem formulation considers a satellite in a transient phase when a 10 meters long mast with a 10 kg tip mass deploys in orbit to change the moments of inertia properly for passive gravity-gradient stabilization. For consistence, the dynamics includes the gravity-gradient torque. For details of the problem formulation see [6] and for quaternion formulation see [14].

$$\dot{\omega}_1 = \frac{I_{zz-}I_{22}}{I_{xx}}\left(\frac{12\mu}{R^3}(q_1q_2 - q_3q_4)(q_1q_3 + q_2q_4) - \omega_2\omega_3\right) \tag{6}$$

$$\dot{\omega}_2 = \frac{I_{11} - I_{33}}{I_{22}}\left(\frac{12\mu}{R^3}\left(q_1^2 + q_4^2 - \frac{1}{2}\right)(q_1q_3 + q_2q_4) - \omega_1\omega_3\right) - \frac{\dot{I}_{22}}{I_{22}}\omega_2 \tag{7}$$

$$\dot{\omega}_2 = \frac{I_{22} - I_{11}}{I_{33}}\left(\frac{12\mu}{R^3}\left(q_1^2 + q_4^2 - \frac{1}{2}\right)(q_1q_2 - q_3q_4) - \omega_1\omega_2\right) - \frac{\dot{I}_{33}}{I_{33}}\omega_3 \tag{8}$$

where

q_1, q_2, q_3andq_4 are the components of the quaternion.

μ is the gravitational constant for the Earth

R is the orbit radius

$\sqrt{\frac{\mu}{R^3}}$ is the orbital rate.

The time derivative of the moments of inertia appearing in Eqs. (7–8) are due to the variation of the inertias during the mast deployment.

Note that the Euler's equations, as shown in Eqs. (1–2), are valid for rigid spacecraft or other rigid bodies referred to an inertial system. Many space vehicles are not rigid bodies. There may be flexible components as solar panels, antennas and mobile components such as robot links in operation, reaction wheels, or masts that deploy in orbit changing the mass distribution causing the CM and other mass properties do change. In addition, fuel consumption affects the inertia properties. For example, in case of flexible vibration, fuel consumption, robot arm motion, etc. the inertia matrix vary w.r.t. to time and the Euler's equations become as Eqs. (6–7) a has the general form

$$I\dot{\boldsymbol{\omega}} + \dot{I}\boldsymbol{\omega} + \boldsymbol{\omega} \times I\boldsymbol{\omega} = \boldsymbol{N} \tag{9}$$

For a robot-like spacecraft the tensor of inertia, $\boldsymbol{I}$ become dependent of the manipulator link angles that vary w.r.t. time. Then the term $\dot{I}\omega$ appears in the Euler's equations. Sometimes the term $\dot{I}\omega$ appears only during a transient phase of the vehicle dynamics. For example, the transient in the dynamics analysis presented in [6] refers to the time spam during a 10 meters long mast deployment. After the mast deployment, the term $\dot{I}\omega$ becomes zero. The mast deployment changes the system dynamics because of the changes in the inertia properties. It is necessary to take into account this fact during the launching phase, when stages separate from the launcher. The same occurs during docking and undocking operations. When a chaser spacecraft docks with a target in space, the resulting composed system presents a inertia properties with changes in the inertia tensor and the CM. In a prescribed orbit, the CM is fixed. Therefore, if there is a new configuration of masses the complete system moves to synchronize the mass distribution w.r.t. the orbiting CM. For robot-like spacecraft in action to grasp a target, the control commands must take into account the system synchronization motion otherwise the robot end effectors miss the target.

Another optional approach to derive the Euler's equations is iterative formulation presented by [3]. The starting point is to consider the manipulator as a chain of bodies (links), each one capable of motion relative to its neighbors. Then it is reasonable to compute the velocity of each link, starting by the robot base.

$$ {}^{i}\omega_{i+1} = {}^{i}\omega_{i} + {}^{i}_{i+1}R\dot{\theta}_{i+1}\,{}^{i+1}\hat{Z}_{i+1} \tag{10} $$

$$ \dot{\theta}_{i+1}\,{}^{i+1}\hat{Z}_{i+1} = \begin{Bmatrix} 0 \\ 0 \\ \theta_{i+1} \end{Bmatrix} $$

$$ {}^{i+1}_{i}R^{i}\omega_{i+1} = {}^{i+1}_{i}R\left({}^{i}\omega_{i} + {}^{i}_{i+1}R\dot{\theta}_{i+1}\,{}^{i+1}\hat{Z}_{i+1}\right) $$

then

$$ {}^{i+1}\omega_{i+1} = {}^{i+1}_{i}R^{i}\omega_{i} + \dot{\theta}_{i+1}\,{}^{i+1}\hat{Z}_{i+1} $$

The angular rate of the link $i + 1$ in frame $\{i + 1\}$ (upper script) is

$$ {}^{i+1}\omega_{i+1} = {}^{i+1}_{i}R^{i}\omega_{i} + \dot{\theta}^{i+1}_{i+1}\hat{Z}_{i+1} \tag{11} $$

The angular velocity of the link $i + 1$ is the angular velocity of previous link (i) plus its own rotation. Here ${}^{i}_{i+1}R$ is the rotation matrix relating frames $\{i\}$ and $\{i+1\}$. The time derivative of Eq. (10) is

$$ {}^{i+1}\dot{\omega}_{i+1} = {}^{i+1}_{i}R^{i}\dot{\omega}_{i} + {}^{i+1}_{i}R^{i}\omega_{i} \times \dot{\theta}^{i+1}_{i+1}\hat{Z}_{i+1} + \ddot{\theta}^{i+1}_{i+1}\hat{Z}_{i+1} \tag{12} $$

Then the Euler's equations in the iterative format become

$$ {}^{C_i}\boldsymbol{I}\dot{\boldsymbol{\omega}}_{\boldsymbol{i}} + \boldsymbol{\omega}_{\boldsymbol{i}} \times {}^{C_i}\boldsymbol{I}\boldsymbol{\omega}_{\boldsymbol{i}} = \boldsymbol{N}_{\boldsymbol{i}} \tag{13} $$

where C_i indicates that the frame $\{i\}$ is defined in the center of mass of each link of the manipulator.

One of the most used formulations to derive space manipulator equations of dynamics and its associated kinematics differential equations is the Lagrange-Hamilton variational approach. The approach bases on the system energy. It consists of defining the vector positions of an elemental w.r.t. the system CM of each component of the spacecraft. Then take the time derivatives of the position vectors to obtain the velocities. Finally, write the system kinetic energy. There may be other type of energy such the potential energy. If it is the case, derive the potential energy. Next step writhe the Lagrange's L. Finally, use the Lagrange's formula to derive the equations of motion for the manipulator.

$$\frac{d}{dt}\left(\frac{\partial L}{\partial \dot{q}_i}\right) - \left(\frac{\partial L}{\partial q_i}\right) = Q_i \tag{14}$$

where L is the Lagrange's function given by T - V (kinetic T and potential Energies, V). In this formula, the q_i is the generalized coordinate θ_i. If prismatic joint is considered then the kinetic energy includes the generalized coordinate d_i (manipulator standard notation for prismatic joint variables). For manipulator-like spacecraft, the mathematical model involves the attitude motion coupled with the arm variables. The Langrage's formula for quasi-coordinates applies to obtain the Euler's modified equations

$$\frac{d}{dt}\left\{\frac{\partial T}{\partial \omega}\right\} - [\bar{\omega}]\left\{\frac{\partial T}{\partial \omega}\right\} = \{N\} \tag{15}$$

where

$$\left\{\frac{\partial T}{\partial \omega}\right\} = \left\{\begin{array}{c} \frac{\partial T}{\partial \omega_1} \\ \frac{\partial T}{\partial \omega_2} \\ \frac{\partial T}{\partial \omega_3} \end{array}\right\}$$

$$[\bar{\omega}] = \begin{bmatrix} 0 & -\omega_3 & \omega_2 \\ \omega_3 & 0 & -\omega_1 \\ -\omega_2 & \omega_1 & 0 \end{bmatrix}$$

$$T = \frac{1}{2}\sum_{i=1}^{n} T_n = T_p + T_{\ell_1} + T_{\ell_2} + T_{\ell_3} \ldots + T_n$$

where ℓ = manipulator link, p means the manipulator-like spacecraft base or platform).

Consider Fig. 2 for a brief discussion of the work [7].

The figure illustrates a manipulator-like spacecraft that orbit the Earth under gravity-gradient torque). For this case study no potential energy is considered and the Lagrangian function reduces to $L = T$.

This system the Kinetic energy derived in [7] for the model shown in Fig. 2 is

$$T = T_p + \sum_{i}^{3} T_{\ell_i} \tag{16}$$

$$T_p = \frac{1}{2} I_{px}\omega_x^2 + \frac{1}{2} I_{px}\omega_y^2 + \frac{1}{2} I_{px}\omega_z^2 \tag{17}$$

$$T_{\ell_1} = \frac{1}{2}\Big[\big(I_{x_1}c^2\theta_1 + I_{y_1}s^2\theta_1\big)\omega_x^2 + \big(I_{x_1}s^2\theta_1 + I_{y_1}c^2\theta_1\big)\omega_y^2 + I_{z_1}\big(\omega_{z_a} + \dot{\theta}_1\big)^2\Big] \tag{18}$$

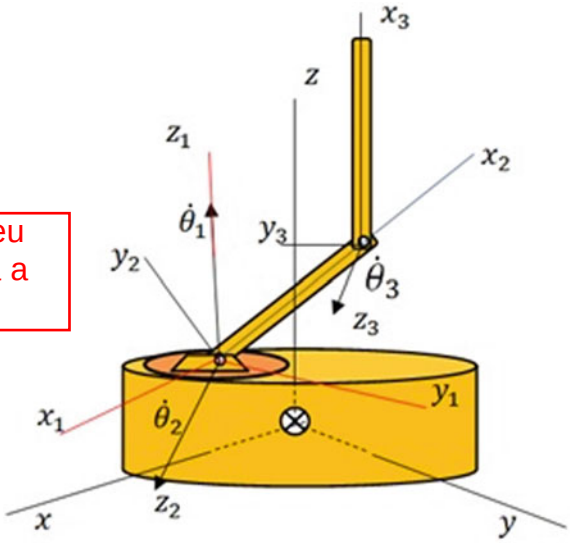

Fig. 2 Manipulator-like spacecraft showing joints, links, frames and the RPY frame (From da Fonseca [7])

Esse robo é como o seu mas não foi construida a tabela DH no artigo.

$$T_{\ell 2} = \frac{1}{2}(I_{y2}s^2\theta_1 c^2\theta_2 + I_{z2}s^2\theta_2)(\omega_x + s\theta_1\dot{\theta}_2)^2 + \frac{1}{2}(I_{y2}s^2\theta_1 s^2\theta_2 + I_{z2}c^2\theta_2)(\omega_y - c\theta_1\dot{\theta}_2)^2 + \frac{1}{2}Iy_2c^2\theta_1(\omega_{za} + \dot{\theta}_1)^2 + I_{z2} - I_{y2}s^2\theta_1)s\theta_2 c\theta_2(\omega_x\omega_y - \omega_x c\theta_1\dot{\theta}_2 + \omega_y s\theta_1\dot{\theta}_2 - s\theta_1 c\theta_1\dot{\theta}_2^2) - I_{y2}s\theta_1 c\theta_1 c\theta_2(\omega_x + s\theta_1\dot{\theta}_2)(\omega_{za} + \dot{\theta}_1) + I_{y2}s\theta_1 c\theta_1 s\theta_2(\omega_y - c\theta_1\dot{\theta}_2)(\omega_{za} + \dot{\theta}_1) \tag{19}$$

$$T_{\ell 3} = \frac{1}{2}\left[I_{y3}s^2\theta_1 c^2(\theta_2 + \theta_3) + I_{z3}s^2(\theta_2 + \theta_3)\right]\left[\omega_x + s\theta_1(\dot{\theta}_2 + \dot{\theta}_3)\right]^2 + \frac{1}{2}[I_{z3}c^2(\theta_2 + \theta_3) + I_{y3}s^2\theta_1 s^2(\theta_2 + \theta_3)][\omega_y - c\theta_1(\dot{\theta}_2 + \dot{\theta}_3)]^2 + \frac{1}{2}I_{y3}c^2\theta_1(\omega_{za} + \dot{\theta}_1)^2 - [(I_{z3} - I_{y3}s^2\theta_1)s(\theta_2 + \theta_3)c(\theta_2 + \theta_3)][\omega_x + s\theta_1(\dot{\theta}_2 + \dot{\theta}_3)][\omega_y - c\theta_1(\dot{\theta}_2 + \dot{\theta}_3)] - I_{y3}s\theta_1 c\theta_1 c(\theta_1 + \theta_3)[\omega_x + s\theta_1(\dot{\theta}_2 + \dot{\theta}_3)](\omega_{za} + \dot{\theta}_1) + I_{y3}s\theta_1 c\theta_1 s(\theta_2 + \theta_3)[\omega_y - c\theta_1(\dot{\theta}_2 + \dot{\theta}_3)](\omega_{za} + \dot{\theta}_1) \tag{20}$$

where

xyz coincides with the principal axis of inertia of the spacecraft platform (p) when the manipulator is not operating. In the nominal configuration, the initial position is zero for the manipulator link angles and rates.

I_{px}, I_{py}, and I_{pz} are the principal moments of inertia for the spacecraft platform;

ℓ_i $i = 1,2,3$ are links of the robotic manipulator

I_{x_i} *i = 1,2,3* are the moments of inertia w.r.t. $x - axis$ for the links ℓ_i, *i = 1,2,3;*

I_{y_i} *i = 1,2,3* are the moments of inertia of w.r.t. $y - axis$

I_{z_i} *i = 1,2,3* are the moments of inertia of w.r.t. $z - axis$

$\left\{ \omega_x \ \omega_y \ \omega_z \right\}^T$ is angular velocity vector of the spacecraft. The components of the vector are the angular rates.

$s\theta_i$ and $c\theta_i$, $i = 1,2$ are the $sin\theta_i$ and $cos\theta_i$, respectively

$s(\theta_2 + \theta_3)$ and $c(\theta_2 + \theta_3)$ are $sin(\theta_2 + \theta_3)$ and $cos(\theta_2 + \theta_3)$, respectively.

$\dot{\theta}_i$ *i = 1,2,3* are the rates of the robotic manipulator

$\omega_{z_a} = \omega_z + n$, where n is orbital rate.

This algebraic manipulation is just to compute the kinetic energy and then use Eqs. (14) and (15) obtain explicitly the differential equations for the rotational motion in orbit.

As the robot-like spacecraft orbits the Earth, it is necessary to derive the associated equations of the orbital motion. Such equations apply during the close proximity approach of the space robot w.r.t. its target in orbit. That is to say that these equations refer to the relative orbital motion between the space robot and its target. The Newton's Method is the formulation used to derive the mathematical model for this case. [14] derive these equations as

$$\ddot{x} - 2n\dot{y} - 3n^2 x = 0 \tag{21}$$

$$\ddot{y} + 2n\dot{x} = 0 \tag{22}$$

$$\ddot{z} + n^2 \dot{z} = 0 \tag{23}$$

The external torque N associated to the Euler's modified equation Eq. (9, 13, 15) must also be modeled. Particularly, for the mathematical modeling of RVD/B it is necessary to include in the mathematical model, the reaction forces and torques arising from the manipulator motion. [3] presents this feature of the manipulator motion in the iterative Newton-Euler's dynamics formulation. For a more complete dynamics analysis via computer simulation of motion it is necessary to design a control law including a proper control technique. For the case approached in [7], the dynamics analysis and control implemented by computer simulation is a huge and complicated problem formulation, including the complete set of non linear equations. For details refers do that paper.

4 Conclusion

This work presents a brief historic of the space exploration to contextualize the space robotics. The article approaches the space robotics subject and its associated applications for on-orbit and planetary activities. The discussion of orbital robots points the key issues to have robot efficiency when working in the microgravity environment. For planetary exploration, the article points the planets and other celestial body surfaces as the main problem that robot rovers must be able to overcome. This study presents the concept, applications, and operation of telerobots, pointing them as very important for the OOS and as strategic for colonization of Moon and Mars in a near future. The work also points the microgravity and planetary surfaces features as the main performance problems for robot tasks on-orbit and on the surface of planets. The paper presents some consideration about the huge radiations, high temperature, atmosphere, weather, and features of planets/moons surfaces and their associated effects on robots efficiency in performing tasks. The work discusses the classification of the robots according to their OOS and planetary exploration tasks, including asteroids and comet missions. In the context of orbital applications, the paper presents the RVD/B and OOS as the main orbital robot applications. In addition, it presents the important concept, description and data flow of telerobots. Finally, the article presents the most used approaches for mathematical modeling and presents some examples of two research papers published by the author of this article.

Acknowledgements This work is partially supported Capes, INCT/CNPq, AEB, UFPR.

References

1. Arantes Jr, G (2011) Rendezvous with a Non-cooperating Target, PhD Thesis dissertation, International University of Bremen, IUB, Germany
2. Arantes Jr G, Rocco EM, Da Fonseca IM, Theil S (2010) Far and proximity maneuvers of a constellation of service satellites and autonomous pose estimation of customer satellite using machine vision. Acta Astronautica. https://doi.org/10.1016/j.actaastro.2009.11.022
3. Craig Johon J. (2005) Introduction to robotics Mechanics and control, 2005 Pearson Education, Inc. Pearson Prentice Hall Pearson Education, Inc. Upper Saddle River, NJ 07458c
4. Da Fonseca IM, Nacib Pontuschka M, Luiz Bertoze Lima G (2019) Kinematics for spacecraft-type robotic manipulators. Kinematics, IntertechOpen, https://www.intechopen.com/online-first/kinematics-for-spacecraft-type-robotic-manipulators
5. Da Fonsecal IM et al (2015) Interaction between motions of robotic manipulator arms and the non-fixed base in on-orbit operations. J Aerosp Technol Manag (Online). https://doi.org/10.5028/jatm.v7i4.458
6. Da Fonseca IM (1985) Anais VIII Congresso Brasileiro de Engenharia Mecânica, COBEM 85, Instituto Tecnológico de Aeronáutica, São José Dos Campos, SP, 10-13 de Dezembro de 1985
7. Da Fonseca IM, Goes LCS, Seito N, Da Silva Duarte MK, De Oliveira EJ (2017) Attitude dynamics and control of a spacecraft like a robotic manipulator when implementing on-orbit servicing. Acta Astronautica 137:490–497. https://doi.org/10.1016/j.actaastro.2016.12.020
8. En.wikipedia.org, Space Rendezvous and docking of spacecraft https://en.wikipedia.org/wiki/Space_rendezvous#cite_note-2, July 2019

9. Fehse W (2003) Automated rendezvous and docking of spacecraft. Cambridge University Press, Cambridge. ISBN: 9780511543388. https://doi.org/10.1017/cbo9780511543388
10. Gatland K (1976) Manned spacecraft, Second Revision. Macmillan Publishing Co., Inc., New York, pp 117–118. ISBN 0–02-542820-9
11. Hall Rex, Shayler David J (2001) The rocket men: Vostok & Voskhod, the first soviet manned spaceflights. Springer-Praxis Books, New York, pp 185–191
12. Skaar SB, Ruoff CF (1994) Teleoperation and robotics in space, progress in astronautics and aeronautics. Vol. 161, Published by the American Institute of Aeronautics and Astronautics, Inc
13. Wertz JR, Bell R (2003) Autonomous rendezvous and docking technologies status and prospects, SPIE AeroSense Symposium, Paper No. 5088–3 Space Systems Technology and Operations Conference, Orlando Florida, April 21–25 2003
14. Wie BS (2014) Vehicle dynamics and control. 2nd edn. American Institute of Aeronautics and Astronautics, Inc. 970 p

View publication stats